What Every Member of the Trade Community Should Know About:

The Classification of Ball Bearings, Roller Bearings and Parts Thereof

AN INFORMED COMPLIANCE PUBLICATION

APRIL 2012

U.S. CUSTOMS and BORDER PROTECTION

NOTICE:

This publication is intended to provide guidance and information to the trade community. It reflects the position on or interpretation of the applicable laws or regulations by U.S. Customs and Border Protection (CBP) as of the date of publication, which is shown on the front cover. It does not in any way replace or supersede those laws or regulations. Only the latest official version of the laws or regulations is authoritative.

Publication History

First Published: January 2010
Reviewed With No Changes April 2011
Reviewed With No Changes April 2012

PRINTING NOTE:

This publication was designed for electronic distribution via the CBP website (http://www.cbp.gov) and is being distributed in a variety of formats. It was originally set up in Microsoft Word 2003®. Pagination and margins in downloaded versions may vary depending upon which word processor or printer you use. If you wish to maintain the original settings, you may wish to download the .pdf version, which can then be printed using the freely available Adobe Acrobat Reader®.

PREFACE

On December 8, 1993, Title VI of the North American Free Trade Agreement Implementation Act (Pub. L. 103-182, 107 Stat. 2057), also known as the Customs Modernization or “Mod” Act, became effective. These provisions amended many sections of the Tariff Act of 1930 and related laws.

Two new concepts that emerge from the Mod Act are “informed compliance” and “shared responsibility,” which are premised on the idea that in order to maximize voluntary compliance with laws and regulations of U.S. Customs and Border Protection, the trade community needs to be clearly and completely informed of its legal obligations. Accordingly, the Mod Act imposes a greater obligation on CBP to provide the public with improved information concerning the trade community's rights and responsibilities under customs regulations and related laws. In addition, both the trade and U.S. Customs and Border Protection share responsibility for carrying out these requirements. For example, under Section 484 of the Tariff Act, as amended (19 U.S.C. 1484), the importer of record is responsible for using reasonable care to enter, classify and determine the value of imported merchandise and to provide any other information necessary to enable U.S. Customs and Border Protection to properly assess duties, collect accurate statistics, and determine whether other applicable legal requirements, if any, have been met. CBP is then responsible for fixing the final classification and value of the merchandise. An importer of record’s failure to exercise reasonable care could delay release of the merchandise and, in some cases, could result in the imposition of penalties.

Regulations and Rulings (RR) of the Office of International Trade has been given a major role in meeting the informed compliance responsibilities of U.S. Customs and Border Protection. In order to provide information to the public, CBP has issued a series of informed compliance publications on new or revised requirements, regulations or procedures, and a variety of classification and valuation issues.

This publication, prepared by the National Commodity Specialist Division of Regulations and Rulings is entitled "The Classification of Ball Bearings, Roller Bearings and Parts Thereof.” It provides guidance regarding the classification of these items. We sincerely hope that this material, together with seminars and increased access to rulings of U.S. Customs and Border Protection, will help the trade community to improve voluntary compliance with customs laws and to understand the relevant administrative processes.

The material in this publication is provided for general information purposes only. Because many complicated factors can be involved in customs issues, an importer may wish to obtain a ruling under Regulations of U.S. Customs and Border Protection, 19 C.F.R. Part 177, or to obtain advice from an expert who specializes in customs matters, for example, a licensed customs broker, attorney or consultant.

Comments and suggestions are welcomed and should be addressed to U.S. Customs and Border Protection, Office of International Trade, Executive Director, Regulations and Rulings, 799 9th Street N.W. 7th floor, Washington, D.C. 20229-1177.

Sandra L. Bell
Executive Director, Regulations and Rulings
Office of International Trade

(This page intentionally left blank)

HISTORY AND DEVELOPMENT OF BEARINGS 7

BEARING TYPES 8

HEADING 8482, HTSUS 10

BALL BEARINGS 10

Ball Bearings with Integral Shafts 11
Ball Bearings without Integral Shafts 12

ROLLER BEARINGS 15

Tapered Roller Bearings 15
Spherical Roller Bearings 16
Cylindrical Roller Bearings 16

OTHER BEARINGS, INCLUDING COMBINATION BALL/ROLLER BEARINGS AND WHEEL HUB UNITS 17

PARTS OF BEARINGS 18

ANTIDUMPING AND COUNTERVAILING DUTIES 19

ADDITIONAL INFORMATION 20

The Internet 20
Customs Regulations 20
Customs Bulletin 20
Importing into the United States 21
Informed Compliance Publications 21
Value Publications 22
“Your Comments are Important” 23

(This page intentionally left blank)

HISTORY AND DEVELOPMENT OF BEARINGS

A bearing is a machine element designed to fix, guide or hold moving parts and to reduce friction.[1] Accordingly, bearings permit machine parts to rotate or move in a straight line relative to one another free of the friction created by rotational or linear motion. In most cases, one of the machine parts is fixed and the bearing acts as a support for the moving member. They are used in various applications including airplanes, automobiles, machine tools, precision instruments, household appliances, etc., none of which could operate effectively or efficiently without them. Bearings can be made of ceramic, sapphire or glass. However, the most common bearings found today are made of steel. Other bearings designed for particular uses, can be made of bronze, copper or plastic.

The concept of using rolling elements to reduce friction can be traced back to ancient times when an arrangement of tree trunks laid down under sleds was used to overcome the friction inherent in moving heavy loads along the ground. This method was used by the Egyptians to facilitate the transportation of the huge blocks of stone used to build the pyramids.[2] Originally, bearings were made of wood, stone, leather or bone.[3] The first plain and rolling element bearings were made of wood. An example of a wooden ball bearing supporting a rotating table was retrieved from the remains of one of the Roman Emperor Caligula's ships found at the bottom of Lake Nemi in Italy.[4] The wrecks date back to around 40 A.D.[5] This finding establishes that the Romans were acquainted with and used ball bearings.

Evidence of the existence of ball bearings is also found in the descriptions and drawings of Leonardo DaVinci around the year 1500.[6] One hundred years later, Galileo described the caged ball bearing.[7] In the mid-1740's, the caged roller bearing was invented by John Harrison.[8]

However, the actual historical turning point of the bearing took place in the late 18th and early 19th centuries during the Industrial Revolution.[9] Major changes evolved in agriculture, transportation and manufacturing and along with it came innovations and improvements to bearings. New types of bearings were invented that contributed to the emerging technological advances. Philip Vaughn, a Welsh inventor, patented the first ball race in 1794.[10]

---

[1] BEARINGS, Columbia Encyclopedia, at http://www.answers.com sci-tech encyclopedia
[2] *Bearing (mechanical)*, History & Development, available at, http://www..absoluteastronomy.com/topics/bearing (mechanical).
[3] *Antifriction Bearing*, The Free Dictionary, available at, http://www.encylopedia2.thefreedictionary.com.
[4] BEARING (mechanical), Wikipedia Free Encyclopedia at http://www.en.wikipedia.org/wiki/Bearing_(mechanical).
[5] *Id*.
[6] *id*.
[7] *id*.
[8] *id*.
[9] *Bearing History*, SNR Group, at http://www.snr-bearings.com/group
[10] Wiki Bearing, *supra* note 4.

Other bearing innovations continued to emerge in the 1800's and 1900's. In 1883, Friedrich Fischer created the ball-grinding machine, a machine to mill and grind balls of equal size and exact roundness.[11] This creation spawned the rolling bearing industry and as such, Fischer is considered the father of the modern ball bearing. Later, Henry Timken patented the tapered roller bearing in 1898.[12] In 1907, the multi-row self-aligning ball bearing was invented by Sven Wingquist.[13] The automotive industry benefited from the caged needle bearing developed by Georg Schaeffler in the 1950's.[14]

Significant improvements in bearing performance and reliability have been made over the last three and a half decades. Leading the way has been technological advancements in the development of bearing materials followed by new developments in bearing lubricants and seals. These developments have enabled manufacturers to design more compact and reliable products that are safer, quieter, faster and less costly.

BEARING TYPES

Bearings can be made of different materials and come in various sizes and designs. However, they are primarily broken down into two major classes. The two main types of bearings are: rolling bearings (which include ball and roller bearings) and sliding bearings also known as "plain shaft bearings." The two types differ in how they reduce friction.

For tariff purposes, ball or roller bearings are designed to reduce rotational friction by providing smooth balls or rollers and a smooth inner and outer surface for the balls to roll against.[15] On the other hand, sliding bearings or plain shaft bearings support moving parts on a thin film of lubricating fluid and operate on the principle of smooth sliding surfaces. To minimize friction, the contact surfaces in a bearing are separated by a film of lubricant, usually oil (in the case of sliding bearings) or by rolling elements (in the case of ball or roller bearings). Heading 8483, under the Harmonized Tariff Schedule of the United States (HTSUS), provides for plain shaft bearings, other sliding bearings and housed bearings. Note that sliding bearings and housed bearings will not be covered in this publication.

---

[11] *Friedrich Fischer*, Motion System Design, (2007), at http://www.motionsystemdesign.com/mag/friedrich_fischer/
[12] Wiki Bearing, *supra* note 4.
[13] *Id*.
[14] UPDATING DAVINCI: THE ROLE OF COMPUTERS IN BEARING DESIGN at, http://www.findarticles.com/p/articles/mi_qa5322/is_200806/ai_n27899379/
[15] Karim Nice, HOW BEARINGS WORK.available at http://www.science.howstuffworks.com; *see also*, Headquarters Ruling Letter (HQ) H017651, dated February 13, 2009.

Ball Bearing
Photo courtesy of Wikipedia
Created by Pearson Scott Foresman

Rolling bearings evolved from the observation that rolling resistance is much less than sliding resistance. These bearings rely on the use of rolling elements to reduce friction. Simply put, all things roll better then they slide.[16] The rolling elements may be balls or rollers. Balls are uniformly spherical, but the rollers may be straight cylinders, barrel-shaped, cone-shaped or of other forms. Illustrated below are the common types of rolling elements used in rolling bearings.

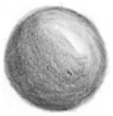

Ball

Tapered Roller

Spherical Roller

Needle Roller

Cylindrical Roller

Drawings by Daniel Volpe

Rolling bearings include: ball bearings, roller bearings (tapered roller bearings, spherical roller bearings, cylindrical roller bearings and needle roller bearings) and combination ball/roller bearings.

In addition to reducing friction, bearings support loads. A load is defined as a force applied to a bearing. There are two types of loads: a radial load; which is a load applied perpendicular to the shaft axis and an axial (thrust) load; which is a load parallel to the shaft axis.[17] The balls in a ball bearing or rollers in a roller bearing "bear" any loads which they may be subject to, thus allowing the bearing to rotate smoothly.[18] Depending on where the bearing is being used, it may support a radial load, a thrust load or a combination of both.[19]

---

[16] HOW BEARINGS WORK, *supra* note 15; *see also*, *A Guide to Bearings*, AHR Int'l, at http://www.ahrinternational.com/introduction_to_bearings
[17] *Id*.
[18] *id*.
[19] *id*.

HEADING 8482, HTSUS

Ball or roller bearings and their parts are classified under the Harmonized Tariff Schedule of the United States, Section XVI, Chapter 84, Heading 8482 as: Ball or roller bearings, and parts thereof.

For tariff purposes, "ball or roller bearings" are defined in Headquarters Ruling Letter (HQ) 96234 dated January 25, 1999, as "articles that function to position, hold and guide moving parts, as well as reduce friction between the moving parts and the fixed parts." These bearings were similarly defined in T.D. 94-22 dated February 28, 1994, as published in the Federal Register on March 22, 1994 (59 FR 13450).[20]

The Explanatory Notes (ENs) to heading 8482, HTSUS, state that "[t]his heading covers all ball, roller or needle roller type bearings."[21] The ENs to heading 8482, HTSUS, further explain that "[n]ormally, bearings consist of two concentric rings (races) enclosing the balls or rollers, and a cage which keeps them in place and ensures that their spacing remains constant." The heading also covers "parts" of ball, roller or needle roller bearings. However, this heading does not cover housed bearings or machinery parts incorporating ball, roller or needle roller bearings; these items are classified in their own appropriate headings (e.g.: bearing housings and bearing brackets (heading 84.83); bicycle hubs (heading 87.14).[22]

BALL BEARINGS

A ball bearing is one of two types of rolling bearings, the other being a roller bearing. The purpose of a ball bearing is to reduce friction and to support radial and axial loads.[23] There are four main parts of a ball bearing: two grooved, ring-like races or tracks (inner and outer ring), a number of hardened steel balls and a cage to space, separate and guide the balls.[24] (*See* illustration below). The inner race is the smaller of the two races and fits inside the larger outer race. The balls fill the space between the two races and allow the bearing to rotate smoothly within the grooves.

---

[20] *See* HQ 960291, dated July 31, 1997 (which referenced the 1994 Federal Register publication); *see also*, *THK America, Inc. v. United States*, 17 CIT 1169 (1993).
[21] Note that there is one exception: ceramic bearings, which are classified under heading 6909, HTSUS. Note 1(b) to Chapter 84 excludes machinery or appliances of ceramic material.
[22] *See e.g.*, HQ 087462, dated October 22, 1990, which classified a "pillow block" housed bearing incorporating roller bearings in heading 8483, HTSUS; *see also*, New York (NY) I88419, dated December 9, 2002, which classified bicycle hubs in heading 8714, HTSUS.
[23] BALL BEARING, Wikipedia Free Encyclopedia, at http://www. en.wikipedia.org/wiki/Ball_bearing
[24] Ball Bearing (Mechanics), Britannica Online Encyclopedia, at http://www.britannica.com.

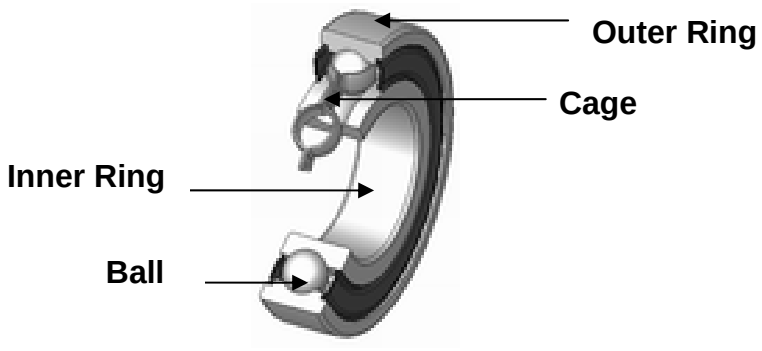

Cross Section of a Ball Bearing
Photo courtesy of Wikipedia
Created by Silberwolf

Ball bearings come in all shapes, sizes and materials and are by far the most common bearing used. They are a required component in many industrial, residential and commercial applications and play an important role in everyday life. These bearings are used in a wide range of products including heavy industrial equipment, such as steel rolling mills, washing machines and personal computer hard drives. Some of their not so common uses are in military aircraft and oil drilling equipment.

Ball bearings are provided for in subheading 8482.10, HTSUS, and are broken down into two main sections. The first section covers ball bearings with integral shafts. The second section covers all other ball bearings and is broken down into two categories which include unground ball bearings and all other ball bearings including: thrust bearings, linear bearings, angular contact bearings and the most common ball bearing, the radial bearing.

Ball Bearings with Integral Shafts

The integral shaft or "water pump spindle bearing" was originally designed as a support bearing for use in automotive engine cooling systems.[25] Due to its versatile design, this bearing can also be used in fans, vane pumps and washing machines. Integral shaft bearings are generally double row ball bearings (two sets of balls) comprised of an outer race with two ball tracks or raceways and an inner "race" that is machined directly into the surface of an internal shaft. They do not have an inner ring like conventional double row ball bearings. As the name suggests, an "integral shaft ball bearing" is simply a ball bearing with a shaft that is an integral part of the bearing, i.e., the shaft cannot be removed without disassembling or otherwise destroying the bearing.

[25] *The Versatility of Integral Shaft Bearings*, ActionWorld,Vol.I, at http://www.actionbearings.com.au/newsletters

Ball bearings with integral shafts are provided for in subheading 8482.10.10, HTSUS. The ten digit classification is based on the outside diameter of the outer ring. *See* NY 867990, dated November 12, 1991 (Which classified ball bearings with integral shafts in subheading 8482.10.10, HTSUS).

Ball Bearings without Integral Shafts

Unground Ball Bearings

An unground ball bearing is a bearing in which the races have not been subjected to a grinding operation during production. The surfaces of unground bearings are often formed by stamping or drawing and are usually not subject to the surface hardening processes to which ground bearings are subjected. Unground bearings are usually of less precision than a ground bearing and are usually distinguished by their dull finish.

Unground bearings are often used in bicycles, lawn mowers, shopping carts and other less demanding applications. All unground ball bearings without integral shafts, regardless of type, are classified under subheading 8482.10.5004, HTSUS.

Thrust Ball Bearings

A thrust ball bearing, as shown to the right, is a particular type of rotational bearing, and like other rotational bearings, permits rotation between two moving parts.[26] These bearings are comprised of balls and washer like bearing rings. The rings may have flat rolling surfaces with no defined raceway or may have contoured rolling tracks (grooved race or washer) that together with a cage assembly hold the balls in place.

Photo courtesy of Wikipedia
Created by Silberwolf

Thrust ball bearings are designed to support axial loads, which are loads applied along the axis of the bearing, as opposed to radial loads, which are applied perpendicular to the axis of the bearing. This type of bearing is found in various items including swivel barstools, turntables, and construction equipment.

Generally, there are three types of thrust bearings: flat-race thrust bearings which consist of flat washers and have a limited load capacity; single-direction thrust bearings, which consist of grooved races and which support axial loads in one direction; and double-direction thrust bearings, which consist of two grooved races and which can accommodate axial loads acting in both directions.[27] Thrust bearings can also incorporate rollers (thrust roller bearings) as a means to reduce friction. Thrust ball

[26] THRUST BEARING, Wikipedia Free Encyclopedia, at http://www.en.wikipedia.org./thrust.
[27] *Thrust Bearings and Lubricants*, Bearings 101-Bearings Reference Center, at http://www.bearings.machinedesign.com; *see also*, *Thrust Ball Bearings*, SKF at http://www.skf.com

bearings are provided for in subheading 8482.10.5008, HTSUS.[28] However, thrust roller bearings will be classified according to the type of roller that is used.

Linear Ball Bearings

Linear ball bearings are ball bearings designed to support loads that move along a straight line, rather than rotating about an axis.[29] Linear ball bearings usually consist of an outer ring, a ball retainer, balls and two end rings. The linear bearing is designed so that balls roll directly on the surface along which the bearing moves.

These bearings provide increased precision and greater longevity than do simple sliding bearings. They are easy to install or replace and usually require minimum maintenance.

Linear ball bearings are occasionally referred to as linear guides and are widely used in precision machinery, medical instruments, agricultural equipment and automated production equipment. Linear ball bearings are provided for in subheading 8482.10.5012, HTSUS.

Angular Contact Ball Bearings

Angular contact ball bearings use axially asymmetric races. The raceways in the inner and outer rings have a raised shoulder which is displaced with respect to each other in the direction of the bearing axis.[30] (*See* Angular Contact Ball Bearing photo to the left; *provided courtesy of Wikipedia*). In simpler terms, this means that these bearings are designed to accommodate combined loads (loads in both the radial and axial directions). The angle of contact is the same on both the inner and outer race. The larger the contact angle, the higher the axial load supported, but the lower the radial load.

In New York Ruling (NY) R04120, dated June 26, 2006, angular contact ball bearings are defined as "having internal contact angles that generally range between 15-40 degrees and are designed to support both radial and axial loads where the axial load would normally exceed the design limits of a typical radial ball bearing." These bearings are found in automobiles, bicycles, turbines, jet engines, dentistry equipment, etc. Angular contact ball bearings are provided for in subheading 8482.10.50, HTSUS. The ten digit classification is dependent on whether the bearing is used in a wheel hub unit and whether the wheel hub unit is flanged.

[28] *See* NY K82366, dated February 5, 2004 and NY K83882, dated March 8, 2004, which classified thrust bearings in subheading 8482.10.5008, HTSUS; *see also*, NY N012103, dated June 2007, (which classified a "thrust bearing" in heading 8482, HTSUS.
[29] *Linear Bearings*, Indian Child, at http://www.indianchild.com/Business/bearings/linear_bearings.htm
[30] *Angular Contact Bearings*, at http://www.bearing-fastener.com/Angular-Contact-Bearing

Radial Ball Bearings

Radial ball bearings are the most common and most widely used ball bearing due to their versatility and durability. There are two basic types of radial ball bearings: the non-filling or Conrad type and the filling slot or maximum capacity type.[31]

The inventor of the Conrad type bearing assembly procedure, Robert Conrad, was given British patent no. 12,206 in 1903 and U.S. patent no. 822,723 in 1906.[32] This method of construction places an inner ring inside of the outer ring. With the rings aligned in the same direction, the inner ring is positioned so that it touches the outer ring at one point. This creates a crescent-shaped open area where an appropriate number of balls are placed.[33] The inner ring is then snapped back to its original position in relationship to the outer ring. The balls are evenly distributed around the raceway, and the retainer is assembled into place. Most radial ball bearings are assembled using the Conrad method of construction.

The maximum capacity or filling slot type radial ball bearings have inner and outer races that are notched so that when they are aligned, additional balls can be slipped into the slot in order to fill the bearing.[34] The advantage of this bearing is that the entire groove is filled with balls. This is called a full complement/capacity which allows these bearing types to carry increased load ratings.

Although designed to carry primarily radial loads, which are loads perpendicular to the axis of the bearing, the deeper the contour of the rolling track, the greater the ability of the bearing to tolerate thrust loads placed along the axis of the bearing. These bearings are designed for use in high speed, high precision applications for the agriculture, automotive and chemical industries. They are also found in engines, motors, hand tools, fans, etc.

For tariff purposes, radial ball bearings are divided into three types: single row ball bearings, double row ball bearings (bearings having two rolls of balls that revolve around the ball path) and bearings having more than a double row of balls. The single row ball bearings are further broken down into the maximum or full capacity type or the non-filling (Conrad) type. Maximum or full capacity type bearings are specifically provided for in subheading 8482.10.5032, HTSUS. The ten digit classification for the Conrad type bearings is dependent on the outside diameter of the bearing. (*See* illustration). For tariff purposes, flanges and other projections from the outside surface of the outer race or ring are not included in the measurement of the outside diameter. The tariff numbers for this bearing type range between subheadings 8482.10.5036 to 8482.10.5056, HTSUS.

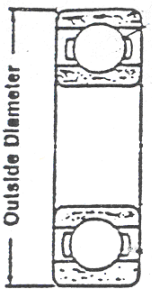

[31] BEARINGS 101, Machine Design, at http://www.bearings.machinedesign.com.
[32] BALL BEARING, *supra* note 23.
[33] *About Radial Ball Bearings*, GLOBAL SPEC, at http://www.mechanical –components.globalspec.com
[34] *Ball Bearing*, New World Encyclopedia, at http://www.newworldencyclopedia.com

Double row ball bearings are classified under subheading 8482.10.5060, HTSUS. Ball bearings having more than two rows of balls are provided for in subheading 8482.10.5064, HTSUS. Finally, all other ball bearings not classified in previous subheadings are classified under subheading 8482.10.5068, HTSUS.

ROLLER BEARINGS

Roller Bearings, like ball bearings, usually have two tracks or races, but the balls are replaced by various types of rollers. The rollers may be straight or barrel-shaped cylinders or truncated cones. Roller bearings are further divided, depending on the shape of the rollers into tapered roller bearings, spherical roller bearings and cylindrical roller bearings (which include needle roller bearings).

These bearings can incorporate a single row, double row or four rows of rollers. The type of roller will determine which load can be carried.

Tapered Roller Bearings

Tapered roller bearings contain conically shaped rolling elements. They are designed to support large radial and large thrust loads. These bearings are used in wheel hubs for vehicles where they are usually mounted in pairs facing opposite directions. This gives the wheel hub the ability to take thrust loads in both directions.[35] Tapered roller bearings are also widely used in agriculture, construction and mining equipment, rolling mills, etc.

The outer race or ring of a tapered roller bearing is referred to as a “cup”. The inside race or ring is referred to as a “cone”. A “cone assembly” is an assembly comprised of a cone and a set of tapered rollers held together by a cage.

Subheading 8482.20, HTSUS, provides for tapered roller bearings, including cone and tapered roller assemblies. The ten digit classification is determined by whether the cup and cone assemblies are being entered separately or together as sets, whether the items are unflanged or flanged wheel hub units and on the measurement of the outside diameter of the cups.

[35] AHR Int’l, *supra* note 16; *see generally*, NY E80659, dated May 10, 1999; HQ H017651, dated February 13, 2009 (Which classified and/or discussed tapered roller bearings).

Tapered Roller Bearing Cone Assembly
Photo courtesy of Wikipedia
Created by Silberwolf

Spherical Roller Bearings

Spherical roller bearings have a barrel-shaped rolling element. Spherical rollers are placed between the inner and outer rings. The raceways of the bearing are contoured to match the spherical surface of the rollers. This allows the caged roller assembly to "pivot" within the raceways, thus allowing the spherical roller bearing to be relatively "self-aligning" when shafts supported by the bearing are misaligned with respect to the axis of the bearing. These bearings withstand not only radial loads but thrust loads in both directions. They are widely used in industrial machinery due to their ability to resist heavy and shock loads.

Double Row Spherical Roller Bearing
Photo courtesy of Wikipedia
Created by Silberwolf

Spherical roller bearings are provided for in subheading 8482.30, HTSUS. The ten digit classification is determined by whether the bearing is single row or not.

Cylindrical Roller Bearings

Cylindrical roller bearings, as the name suggests, are bearings that use cylindrical rollers as rolling elements. In these bearings, the rollers are in linear contact with the raceway. Cylindrical roller bearings have a large radial load capacity. Since the load is supported by the larger surface area offered by the cylindrical roller, they are suitable for handling heavy loads or for use at high speeds. Cylindrical roller bearings are typically used in machine tools, transmissions and wind turbines.

Cylindrical Roller Bearing
Photo courtesy of Wikipedia
Created by Silberwolf

A distinctive type of cylindrical roller bearing is the needle roller bearing. Needle roller bearings are defined for tariff purposes by Subheading Note 2 to Chapter 84, HTSUS, which states that "[s]ubheading 8482.40 [needle roller bearings] applies only to bearings with cylindrical rollers of a uniform diameter not exceeding 5 mm and having a length which is at least three times the diameter. The ends of the rollers may be rounded." Needle roller bearings may be comprised of a needle roller assembly and both an inner and outer race, an outer race alone, or in many cases, simply a caged assembly of rollers with no races. All forms are considered to be complete needle roller bearings for tariff purposes.

Needle roller bearings which meet the terms of Subheading Note 2 to Chapter 84, HTSUS, are provided for in subheading 8482.40.0000, HTSUS. However, cylindrical roller bearings that have a uniform diameter exceeding 5 mm and do not have a length which is at least three times the diameter are provided for in subheading 8482.50.0000 as other cylindrical roller bearings.

Needle Roller Bearing
Photo courtesy of Wikipedia

OTHER BEARINGS, INCLUDING COMBINATION BALL/ROLLER BEARINGS AND WHEEL HUB UNITS

Although this discussion is intended to cover ball and roller bearing basics, it is worth mentioning that wheel hub units are, in some cases, also classifiable as bearings. Wheel hub units, while differing from ordinary ball or roller bearings, are merely enhanced ball or roller bearing units wherein the inner and/or outer ring (race) is flanged to facilitate mounting or some other purpose such as the transmission of torque.[36]

[36] 54 Fed. Reg. at 18, 999; *see also*, *SKF USA, Inc. v. United States*, 762 F. Supp. 344, 349 (1991), 15 C.I.T. 152, *citing* 54 Fed. Reg. 19, 014.

Essentially, wheel hub units consolidate the functional features of a bearing, the wheel flange and shaft with that of the inner and/or outer ring to form a single component. That single component is considered to be a bearing. These types of bearings include: first generation, second generation and third generation wheel hub units. There are wheel hub units for non-drive axles and wheel hub units for drive axles. In a drive axle, for instance, the flanged inner ring is splined on the inner surface, so that when pressed onto the driving axle, the power from the axle can be transmitted to the wheel.[37] Features such as splining provide additional functionalities to the wheel hub unit which are outside the scope of heading 8482. A detailed discussion concerning the classification of wheel hub units exceeds the purpose of this discussion, however, the classification of these items is often determined by whether or not these items have additional functionalities beyond the reduction of rotational friction and whether they are principally or solely used as a part of another article of commerce.[38]

In addition, the tariff is broken down to include other bearings, including combination ball/roller bearings. These bearings are provided for in subheading 8482.80, HTSUS. The ten digit classification is determined by the combination of ball and/or roller elements within the bearing.

PARTS OF BEARINGS

As previously mentioned, rolling bearings, whether ball or roller, are comprised of four basic parts: an inner ring (race), an outer ring (race), rolling elements (balls and/or rollers) and a cage. The inner ring is the smaller of the two rings and has a groove on its outside diameter to form a path for the balls or rollers. It is mounted to the shaft and is usually the rotating element. The outer ring is the larger of the two rings and conversely has a groove on its inside diameter to form a pathway for the balls/rollers. It is normally placed in a housing and is usually stationary.

The rolling elements separate the inner and outer ring and permit the bearing to rotate smoothly with minimal friction. They carry the load and may be either balls, tapered rollers, spherical rollers or cylindrical rollers. The cage separates the balls or rollers, guides them in the pathways during rotation and prevents them from falling out. It may be made of steel, brass, bronze, etc. depending on the type or application of the bearing.

Parts of ball or roller bearings are broken down into two subheadings. Subheading 8482.91, HTSUS, provides for balls, needles and rollers. The ten digit classification is determined by the type of ball or roller. However, the provision for steel balls under 8482.91, HTSUS, is limited by Note 6 to Chapter 84 of the HTSUS to polished steel

[37] *See* HQ 965168, dated July 25, 2002 (which discusses the different types of wheel hub bearing units).
[38] *See* NY 818084, dated February 7, 1996 (which classified a third generation wheel hub unit incorporating a tapered roller bearing for use on drive wheels as a part rather than merely a bearing); *see also*, HQ 960049, dated August 26, 1997 (which classified a non-drive wheel hub unit in heading 8482, HTSUS, as a bearing).

balls (whether for bearings or not), the maximum and minimum diameters of which do not differ from the nominal diameter by more than 1% or by more than .05 mm whichever is less, or (b) bearing balls of copper, bronze, plastics, etc.

Subheading 8482.99, HTSUS, includes parts other than the rolling elements. There are two divisions in this subheading: the first is for inner or outer rings or races including cups for tapered roller bearings, and the second is for other parts of bearings such as cages, rings, fixing sleeve, etc. The ten digit classification breakouts are dependent on what type of bearing the parts are for. However, rubber seals for bearings are separately classified under heading 4016, HTSUS.

ANTIDUMPING AND COUNTERVAILING DUTIES

There are various antidumping cases that presently cover ball bearings, roller bearings and parts thereof. A list of current antidumping and countervailing duty cases can be found at the International Trade Commission website at www.usitc.gov. The link to "Antidumping and Countervailing duty orders" under "Investigations" provides a search mechanism for current orders by country, date and product group. In addition, AD/CVD deposit and liquidation messages are available using the AD/CVD search tool at the U.S. Customs and Border Protection website at www.cbp.gov. Furthermore, information can be obtained by contacting the Office of Field Operations at your local port of entry.

ADDITIONAL INFORMATION

The Internet

The home page of U.S. Customs and Border Protection on the Internet's World Wide Web, provides the trade community with current, relevant information regarding CBP operations and items of special interest. The site posts information -- which includes proposed regulations, news releases, publications and notices, etc. -- that can be searched, read on-line, printed or downloaded to your personal computer. The web site was established as a trade-friendly mechanism to assist the importing and exporting community. The web site also links to the home pages of many other agencies whose importing or exporting regulations that U.S. Customs and Border Protection helps to enforce. The web site also contains a wealth of information of interest to a broader public than the trade community. For instance, the "Know Before You Go" publication and traveler awareness campaign is designed to help educate international travelers.

The web address of U.S. Customs and Border Protection is http://www.cbp.gov

Customs Regulations

The current edition of Customs and Border Protection Regulations of the United States is a loose-leaf, subscription publication available from the Superintendent of Documents, U.S. Government Printing Office, Washington, DC 20402; telephone (202) 512-1800. A bound edition of Title 19, Code of Federal Regulations is also available for sale from the same address. All proposed and final regulations are published in the Federal Register, which is published daily by the Office of the Federal Register, National Archives and Records Administration, and distributed by the Superintendent of Documents. Information about on-line access to the Federal Register may be obtained by calling (202) 512-1530 between 7 a.m. and 5 p.m. Eastern time. These notices are also published in the weekly Customs Bulletin described below.

Customs Bulletin

The Customs Bulletin and Decisions ("Customs Bulletin") is a weekly publication that contains decisions, rulings, regulatory proposals, notices and other information of interest to the trade community. It also contains decisions issued by the U.S. Court of International Trade, as well as customs-related decisions of the U.S. Court of Appeals for the Federal Circuit. Each year, the Government Printing Office publishes bound volumes of the Customs Bulletin. Subscriptions may be purchased from the Superintendent of Documents at the address and phone number listed above.

Importing into the United States

This publication provides an overview of the importing process and contains general information about import requirements. The current edition of Importing Into the United States contains much new and revised material brought about pursuant to the Customs Modernization Act ("Mod Act"). The Mod Act has fundamentally altered the relationship between importers and U.S. Customs and Border Protection by shifting to the importer the legal responsibility for declaring the value, classification, and rate of duty applicable to entered merchandise.

The current edition contains a section entitled "Informed Compliance." A key component of informed compliance is the shared responsibility between U.S. Customs and Border Protection and the import community, wherein CBP communicates its requirements to the importer, and the importer, in turn, uses reasonable care to assure that CBP is provided accurate and timely data pertaining to his or her importation.

Single copies may be obtained from local offices of U.S. Customs and Border Protection, or from the Office of Public Affairs, U.S. Customs and Border Protection, 1300 Pennsylvania Avenue NW, Washington, DC 20229. An on-line version is available at the CBP web site. Importing into the United States is also available for sale, in single copies or bulk orders, from the Superintendent of Documents by calling (202) 512-1800, or by mail from the Superintendent of Documents, U.S. Government Printing Office, P.O. Box 979050, St. Louis, MO 63197-9000.

Informed Compliance Publications

U.S. Customs and Border Protection has prepared a number of Informed Compliance publications in the "*What Every Member of the Trade Community Should Know About:…"* series. Check the Internet web site http://www.cbp.gov for current publications.

Value Publications

Customs Valuation under the Trade Agreements Act of 1979 is a 96-page book containing a detailed narrative description of the customs valuation system, the customs valuation title of the Trade Agreements Act (§402 of the Tariff Act of 1930, as amended by the Trade Agreements Act of 1979 (19 U.S.C. §1401a)), the Statement of Administrative Action which was sent to the U.S. Congress in conjunction with the TAA, regulations (19 C.F.R. §§152.000-152.108) implementing the valuation system (a few sections of the regulations have been amended subsequent to the publication of the book) and questions and answers concerning the valuation system.

Customs Valuation Encyclopedia (with updates) is comprised of relevant statutory provisions, CBP Regulations implementing the statute, portions of the Customs Valuation Code, judicial precedent, and administrative rulings involving application of valuation law. A copy may be purchased for a nominal charge from the Superintendent of Documents, Government Printing Office, P.O. Box 371954, Pittsburgh, PA 15250-7054. This publication is also available on the Internet web site of U.S. Customs and Border Protection.

The information provided in this publication is for general information purposes only. Recognizing that many complicated factors may be involved in customs issues, an importer may wish to obtain a ruling under CBP Regulations, 19 C.F.R. Part 177, or obtain advice from an expert (such as a licensed Customs Broker, attorney or consultant) who specializes in customs matters. Reliance solely on the general information in this pamphlet may not be considered reasonable care.

Additional information may also be obtained from U.S. Customs and Border Protection ports of entry. Please consult your telephone directory for an office near you. The listing will be found under U.S. Government, Department of Homeland Security.

"Your Comments are Important"

The Small Business and Regulatory Enforcement Ombudsman and 10 regional Fairness Boards were established to receive comments from small businesses about Federal agency enforcement activities and rate each agency's responsiveness to small business. If you wish to comment on the enforcement actions of U.S. Customs and Border Protection, call 1-888-REG-FAIR (1-888-734-3247).

REPORT SMUGGLING 1-800-BE-ALERT OR 1-888-NO-DROGA

Visit our Internet web site: http://www.cbp.gov